ORDER NO. CPD1001210CE

Service Manual

First Aid

Notebook Computer

Model No. CF-31ATAAXDM

TOUGHBOOK

This is the Service Manual for
the following areas.
M ...for U.S.A. and Canada

⚠ WARNING

This service information is designed for experienced repair technicians only and is not designed for use by the general public.
It does not contain warnings or cautions to advise non-technical individuals of potential dangers in attempting to service a product.
Products powered by electricity should be serviced or repaired only by experienced professional technicians. Any attempt to service or repair the product or products dealt with in this service information by anyone else could result in serious injury or death.

Panasonic®

© Panasonic Corporation 2010.
Unauthorized copying and distribution is a violation of law.

WARNING

For U.K.

This apparatus must be earthed for your safety.

To ensure safe operation the three-pin plug must be inserted only into a standard three-pin power point which is effectively earthed through the normal household wiring.
Extension cords used with the equipment must be three-core and be correctly wired to provide connection to earth. Wrongly wired extension cords are a major cause of fatalities.
The fact that the equipment operates satisfactorily does not imply that the power point is earthed and that the installation is completely safe.
For your safety, if you have any doubt about the effective earthing of the power point, consult a qualified electrician.

FOR YOUR SAFETY PLEASE READ THE FOLLOWING TEXT CAREFULLY

This appliance is supplied with a moulded three pin mains plug for your safety and convenience.
A 3 amp fuse is fitted in this plug.
Should the fuse need to be replaced please ensure that the replacement fuse has a rating of 3 amps and that it is approved by ASTA or BSI to BS 1362.

Check for the ASTA mark or the BSI mark on the body of the fuse.
If the plug contains a removable fuse cover you must ensure that it is refitted when the fuse is replaced.
If you lose the fuse cover the plug must not be used until a replacement cover is obtained.
A replacement fuse cover can be purchased from your local Panasonic Dealer.
IF THE FITTED MOULDED PLUG IS UNSUITABLE FOR THE SOCKET OUTLET IN YOUR HOME THEN THE FUSE SHOULD BE REMOVED AND THE PLUG CUT OFF AND DISPOSED OF SAFELY.
THERE IS A DANGER OF SEVERE ELECTRICAL SHOCK IF THE CUT OFF PLUG IS INSERTED INTO ANY 13 AMP SOCKET.
If a new plug is to be fitted please observe the wiring code as shown below.
If in any doubt please consult a qualified electrician.

Warning: THIS APPLIANCE MUST BE EARTHED.

Important

The wires in this mains lead are coloured in accordance with the following code:

Green-and-yellow:	Earth
Blue:	Neutral
Brown:	Live

As the colours of the wires in the mains lead of this apparatus may not correspond with the coloured markings identifying the terminals in your plug, proceed as follows:
The wire which is coloured GREEN-and-YELLOW must be connected to the terminal in the plug which is marked by the letter E or by the safety earth symbol coloured GREEN or GREEN-and-YELLOW.

The wire which is coloured Blue must be connected to the terminal which is marked with the letter N or coloured BLACK.
The wire which is coloured Brown must be connected to the terminal which is marked with the letter L or coloured RED.

The mains plug on this equipment must be used to disconnect the mains power.
Please ensure that a socket outlet is available near the equipment and shall be easily accessible.

How to replace the fuse

Open the fuse compartment with a screwdriver and replace the fuse.

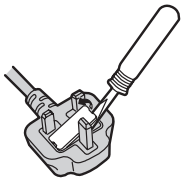

Warnings

- This equipment is not designed for connection to an IT power system.
  (An IT system is a system having no direct connections between live parts and Earth; the exposed-conducive-parts of the electrical installation are earthed.
  An IT system is not permitted where the computer is directly connected to public supply systems in the U.K.)
- Disconnect the mains plug from the supply socket when the computer is not in use.

This equipment is produced to BS800/1983.

LASER SAFETY INFORMATION

For U.S.A.

Class 1 LASER-Product

This product is certified to comply with DHHS Rules 21 CFR Subchapter J.
This product complies with European Standard EN60825 (or IEC Publication 825)

For all areas
This equipment is classified as a class 1 level LASER product and there is no hazardous LASER radiation.

Caution:
(1) Use of controls or adjustments or performance of procedures other than those specified herein may result in hazardous radiation exposure.
(2) The drive is designed to be incorporated into a computer-based system or unit which has an enclosing cover. It should never be used as a stand alone drive.

Danger:
The serviceman should not remove the cover of drive unit and should not service because the drive unit is a nonserviceable part.
Please check DANGER label on PD-drive unit.

• Unplug the AC power cord to the equipment before opening the top cover of the drive.
When the power switch it on, do not place your eyes close to the front panel door to look into the interior of the unit.

LASER Specification

Class 1 level LASER Product
Wave Length: DVD 658±8 nm
CD 775~815 nm

Laser safety information is appropriate only when drive with laser is installed.

SAFETY PRECAUTIONS

1. Before servicing, unplug the power cord to prevent an electric shock.
2. When replacing parts, use only manufacture's recommended components for safety.
3. Check the condition of the power cord. Replace if wear or damage is evident.
4. After servicing, be sure to restore the lead dress, insulation barriers, insulation papers, shields, etc.

Important Safety Instructions

When using your telephone equipment, basic safety precautions should always be followed to reduce the risk of fire, electric shock and injury to persons, including the following:

1. Do not use this product near water, for example, near a bath tub, wash bowl, kitchen sink or laundry tub, in a wet basement or near a swimming pool.
2. Avoid using a telephone (other than a cordless type) during an electrical storm. There may be a remote risk of electric shock from lightning.
3. Do not use the telephone to report a gas leak in the vicinity of the leak. vicinity of the leak.
4. Use only the power cord and batteries indicated in this manual. Do not dispose of batteries in a fire. They may explode. Check with local codes for possible special disposal instructions.

SAVE THESE INSTRUCTIONS

LITHIUM BATTERY

This computer contains a lithium battery to enable the date, time, and other data to be stored. The battery should only be exchanged by authorized service personel.

Warning! A risk of explosion from incorrect installation or misapplication may possibly occur.

LITHIUM BATTERY ⚠

- **CAUTION**

  Danger of explosion if battery is incorrectly replaced.
  Replace only with the same or equivalent type battery recommended by the manufacturer.
  Dispose of used batteries according to the manufacturer's instructions.

LITHIUMBATTERIES ⚠

Vorsicht!

Explosionsgefahr bei unsachgemäßem Austausch der Batterie. Ersatz nur durch denselben order einen vom Hersteller empfohlenen ähnlichen Typ. Entsorgung gebrauchter Batterien nach Angaben des Herstellers.

PILE AU LITHIUM ⚠

ATTENTION: IL Y A DANGER D'EXPLOSION S' IL Y A REMPLACEMENT INCORRECT DE LA PILE. REMPLACER UNIQUEMENT AVEC UNE PILE DU MÈME TYPE OU D'UN TYPE RECOMMANDÉ PAR LE CONSTRUCTEUR. METTRE AU RÉBUT LES PILES USAGÉES CONFORMÉMENT AUX INSTRUCTIONS DU FABRICANT.

Precautions (Battery Pack)

Do Not Use with Any Other Product
The battery pack is rechargeable and was intended for the specified product. If it is used with a product other than the one for which it was designed, electrolyte leakage, generation of heat, ignition or rupture may result.

Do Not Charge the Battery Using Methods Other Than Those Specified
If the battery is not charged using one of the specified methods, electrolyte leakage, generation of heat, ignition or rupture may result.

Do Not Throw the Battery Pack into a Fire or Expose It to Excessive Heat
Generation of heat, ignition or rupture may result.

Avoid Extreme Heat (Near the Fire, in Direct Sunlight, for Example)
Electrolyte leakage, generation of heat, ignition or rupture may result.

Do Not Insert Sharp Objects into the Battery Pack, Expose It to Bumps or Shocks, Disassemble, or Modify It
Electrolyte leakage, generation of heat, ignition or rupture may result.

Do Not Short the Positive (+) and Negative (-) Contacts
Generation of heat, ignition or rupture may result. Do not place the battery pack together with articles such as necklaces or hairpins when carrying or storing.

Do Not Use This Product with a Battery Pack Other Than the One Specified
Use only the specified battery pack with your product. Use of battery packs other than those manufactured and supplied by Panasonic may present a safety hazard (generation of heat, ignition or rupture).

RECYCLE RBRC Li-ion 1.800.822.8837

A lithium ion battery that is recyclable powers the product you have purchased.
Please call 1-800-8-BATTERY for information on how to recycle this battery.

L'appareil que vous vous êtes procuré est alimenté par une batterie au lithium-ion.
Pour des renseignements sur le recyclage de la batterie, veuillez composer le 1-800-8-BATTERY.

When the Battery Pack Has Become Degraded, Replace It with a New One
Continued use of a degraded battery pack may generate high levels of heat, cause a fire to start and cause the pack to burst or explode.

- Do not touch the terminals on the battery pack. The battery pack may no longer function properly if the contacts are dirty or damaged.
- Do not expose the battery pack to water, or allow it to become wet.
- If the battery pack will not be used for a long period of time (a month or more), charge or discharge (use) the battery pack until the remaining battery level becomes 30% to 40% and store it in a cool, dry place.
- This computer prevents overcharging of the battery by recharging only when the remaining power is less than approx. 95% (when Economy Mode (ECO) is enabled: 75%) of capacity.
- The battery pack is not charged when the computer is first purchased. Be sure to charge it before using it for the first time. When the AC adaptor is connected to the computer, charging begins automatically.
- Should the battery leak and the fluid get into your eyes, do not rub your eyes. Immediately flush your eyes with clear water and see a doctor for medical treatment as soon as possible.

NOTE

- The battery pack may become warm during recharging or normal use. This is completely normal.
- Recharging will not commence if internal temperature of the battery pack is outside of the allowable temperature range (0 °C to 55 °C {32 °F to 131 °F}). (➔ *Reference Manual* "Battery Power") Once the allowable range requirement is satisfied, charging begins automatically. Note that the recharging time varies based on the usage conditions. (Recharging takes longer than usual when the temperature is 10 °C {50 °F} or below.)
- If the temperature is low, the operating time is shortened. Only use the computer within the allowable temperature range.
- The battery pack is a consumable item. If the amount of time the computer can be run by using a particular battery pack becomes dramatically shorter and repeated recharging does not restore its performance, the battery pack should be replaced with a new one.
- When transporting a spare battery inside a package, briefcase, etc., it is recommended that it be placed in a plastic bag so that its contacts are protected.
- Always power off the computer when it is not in use. Leaving the computer on when the AC adaptor is not connected will exhaust the remaining battery capacity.

Precautions (AC Adaptor)

FOR USE WITH MODEL NO. **CF-AA5713A**

POUR UTILISER AVEC MODÈLE **CF-AA5713A**

Use Only the Specified AC Adaptor With This Product
Using an AC adaptor other than the one supplied (attached to your product or supplied by Panasonic) may result in a fire.

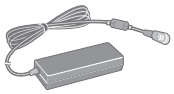

Model No: CF-AA5713A

Exploded View

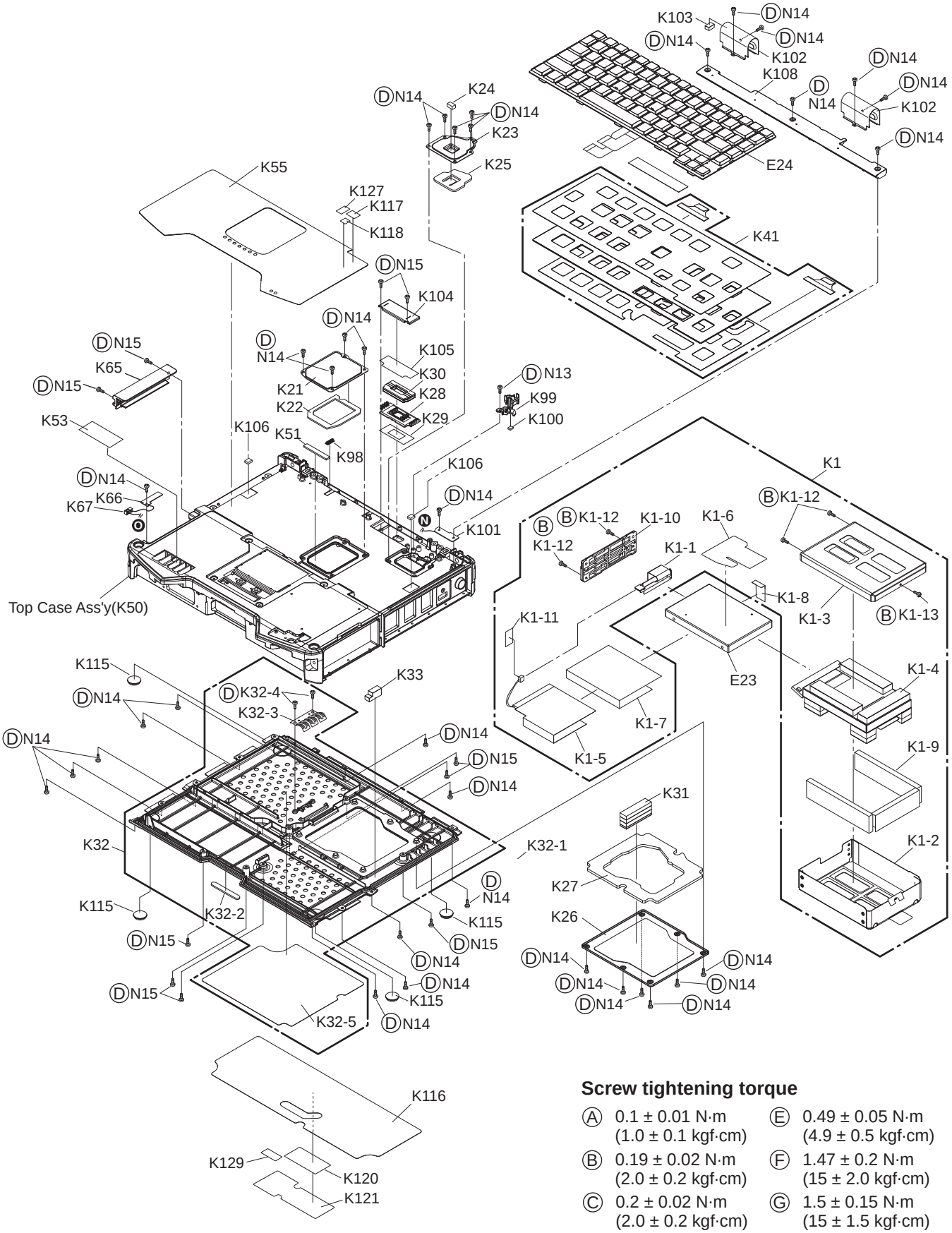

Screw tightening torque

Ⓐ	0.1 ± 0.01 N·m (1.0 ± 0.1 kgf·cm)	Ⓔ	0.49 ± 0.05 N·m (4.9 ± 0.5 kgf·cm)
Ⓑ	0.19 ± 0.02 N·m (2.0 ± 0.2 kgf·cm)	Ⓕ	1.47 ± 0.2 N·m (15 ± 2.0 kgf·cm)
Ⓒ	0.2 ± 0.02 N·m (2.0 ± 0.2 kgf·cm)	Ⓖ	1.5 ± 0.15 N·m (15 ± 1.5 kgf·cm)
Ⓓ	0.45 ± 0.05 N·m (4.5 ± 0.5 kgf·cm)	Ⓗ	0.3 ± 0.5 N·m (3.0 ± 0.5 kgf·cm)

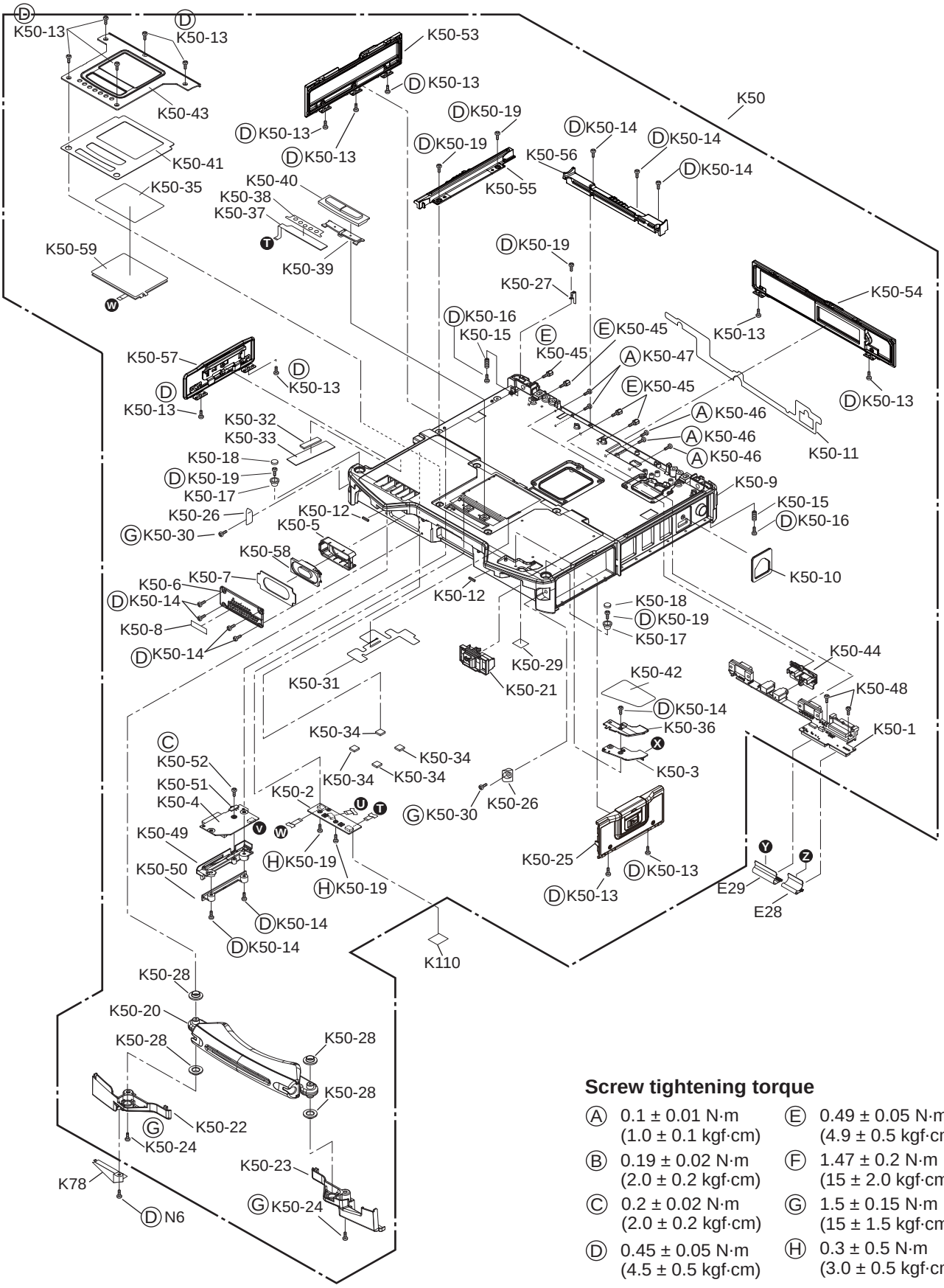

Screw tightening torque

Ⓐ	0.1 ± 0.01 N·m (1.0 ± 0.1 kgf·cm)	Ⓔ	0.49 ± 0.05 N·m (4.9 ± 0.5 kgf·cm)
Ⓑ	0.19 ± 0.02 N·m (2.0 ± 0.2 kgf·cm)	Ⓕ	1.47 ± 0.2 N·m (15 ± 2.0 kgf·cm)
Ⓒ	0.2 ± 0.02 N·m (2.0 ± 0.2 kgf·cm)	Ⓖ	1.5 ± 0.15 N·m (15 ± 1.5 kgf·cm)
Ⓓ	0.45 ± 0.05 N·m (4.5 ± 0.5 kgf·cm)	Ⓗ	0.3 ± 0.5 N·m (3.0 ± 0.5 kgf·cm)

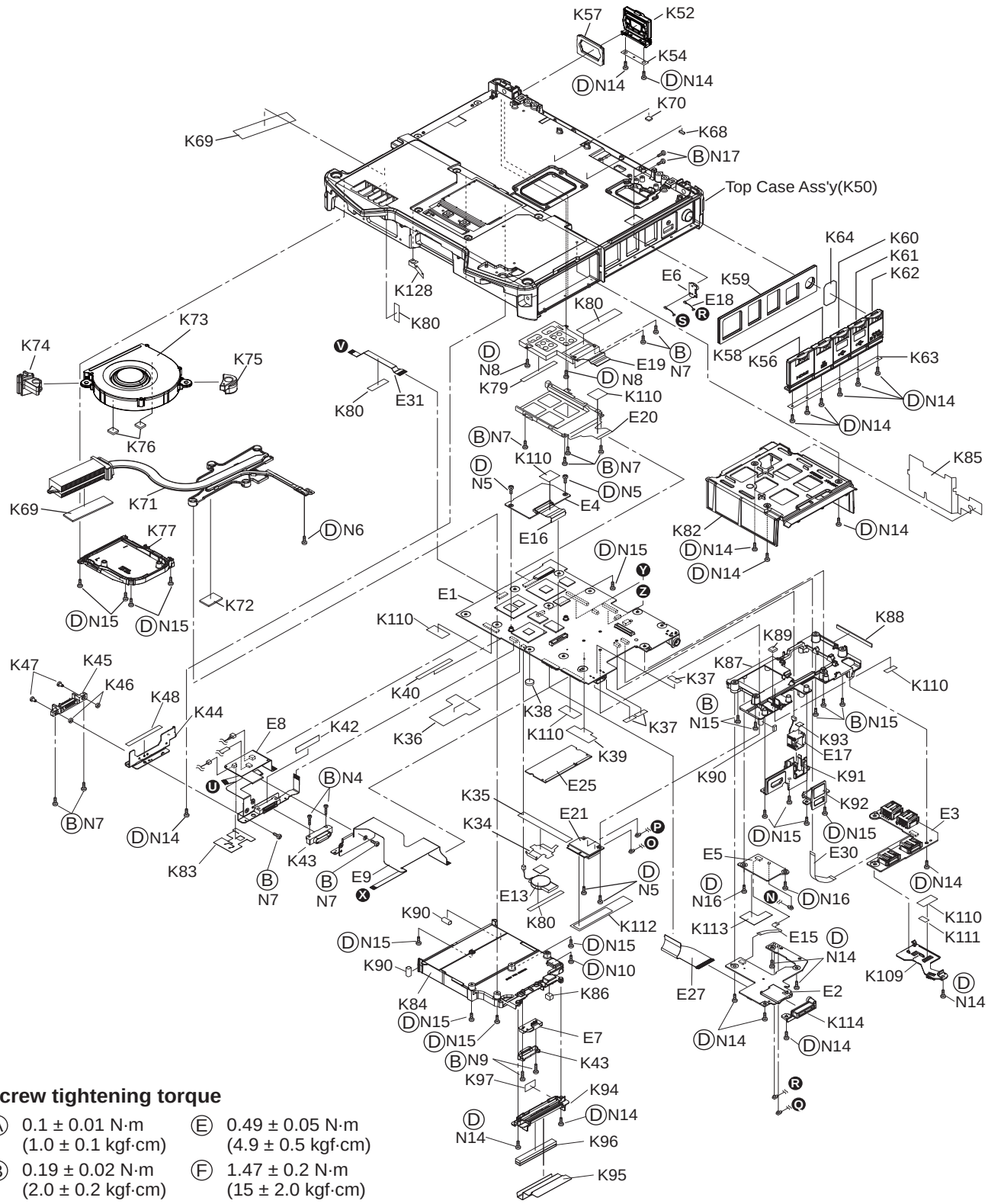

Screw tightening torque

Ⓐ 0.1 ± 0.01 N·m (1.0 ± 0.1 kgf·cm)	Ⓔ 0.49 ± 0.05 N·m (4.9 ± 0.5 kgf·cm)
Ⓑ 0.19 ± 0.02 N·m (2.0 ± 0.2 kgf·cm)	Ⓕ 1.47 ± 0.2 N·m (15 ± 2.0 kgf·cm)
Ⓒ 0.2 ± 0.02 N·m (2.0 ± 0.2 kgf·cm)	Ⓖ 1.5 ± 0.15 N·m (15 ± 1.5 kgf·cm)
Ⓓ 0.45 ± 0.05 N·m (4.5 ± 0.5 kgf·cm)	Ⓗ 0.3 ± 0.5 N·m (3.0 ± 0.5 kgf·cm)

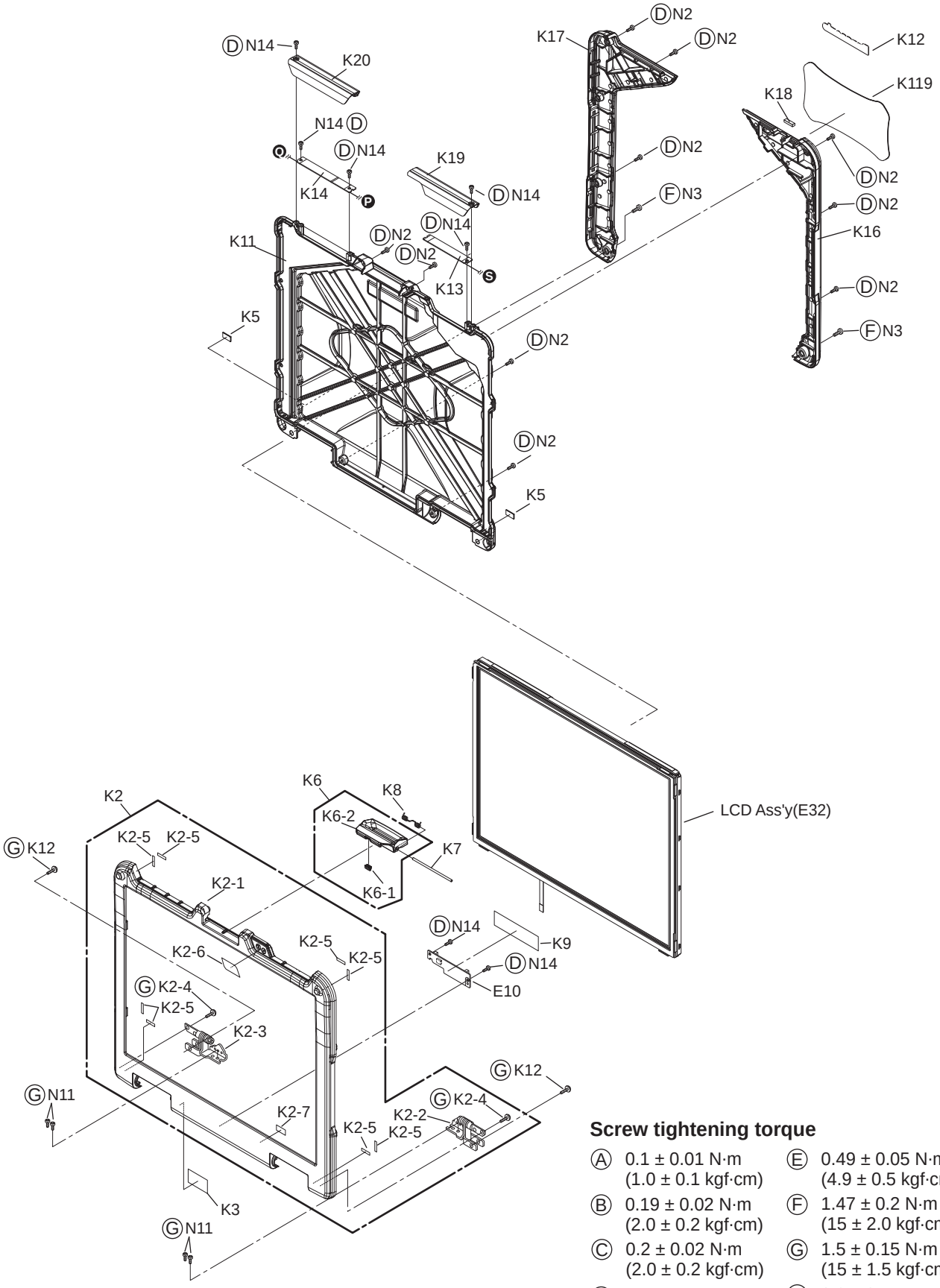

Screw tightening torque

Ⓐ	0.1 ± 0.01 N·m (1.0 ± 0.1 kgf·cm)	Ⓔ	0.49 ± 0.05 N·m (4.9 ± 0.5 kgf·cm)
Ⓑ	0.19 ± 0.02 N·m (2.0 ± 0.2 kgf·cm)	Ⓕ	1.47 ± 0.2 N·m (15 ± 2.0 kgf·cm)
Ⓒ	0.2 ± 0.02 N·m (2.0 ± 0.2 kgf·cm)	Ⓖ	1.5 ± 0.15 N·m (15 ± 1.5 kgf·cm)
Ⓓ	0.45 ± 0.05 N·m (4.5 ± 0.5 kgf·cm)	Ⓗ	0.3 ± 0.5 N·m (3.0 ± 0.5 kgf·cm)

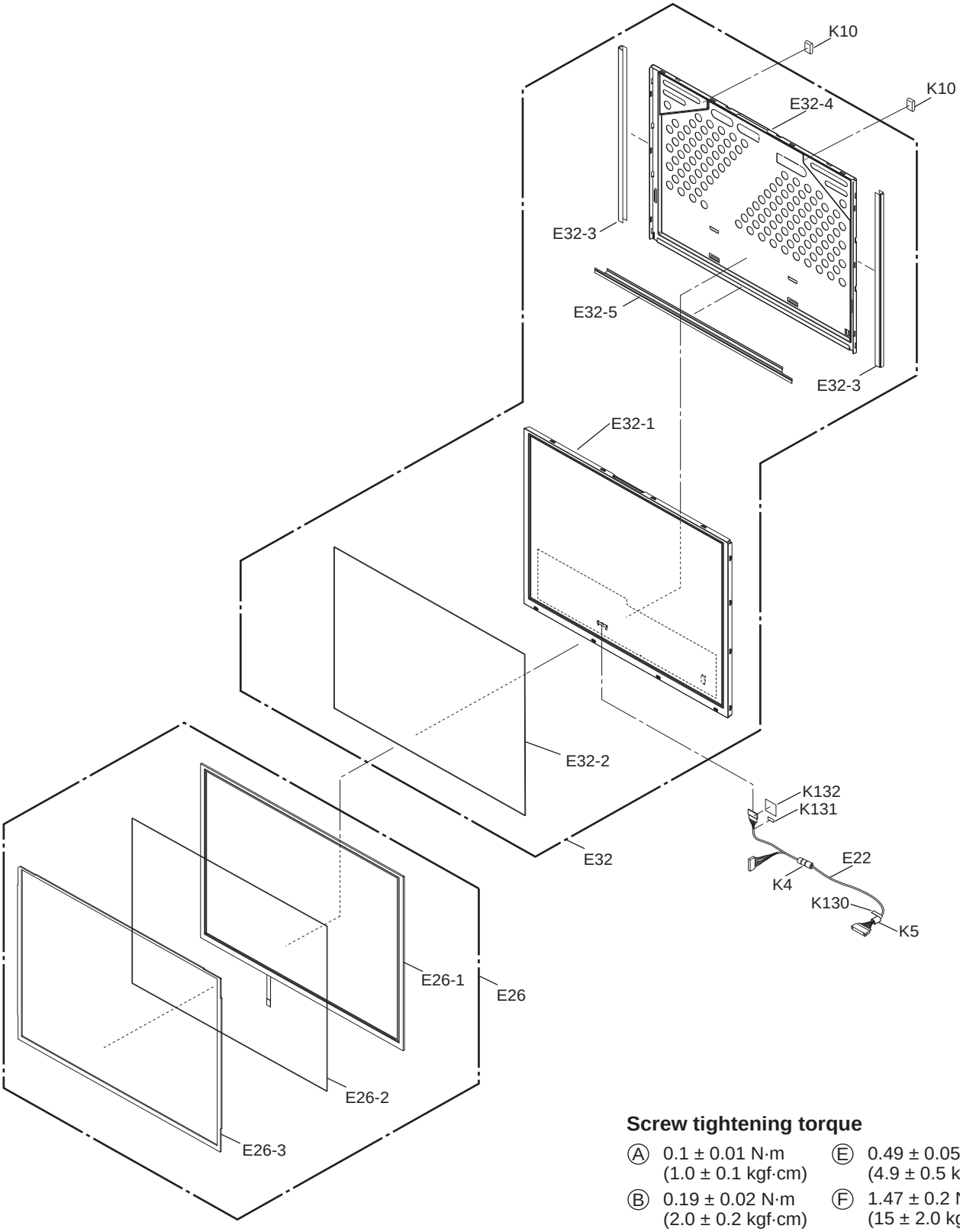

Screw tightening torque

Ⓐ 0.1 ± 0.01 N·m (1.0 ± 0.1 kgf·cm)	Ⓔ 0.49 ± 0.05 N·m (4.9 ± 0.5 kgf·cm)
Ⓑ 0.19 ± 0.02 N·m (2.0 ± 0.2 kgf·cm)	Ⓕ 1.47 ± 0.2 N·m (15 ± 2.0 kgf·cm)
Ⓒ 0.2 ± 0.02 N·m (2.0 ± 0.2 kgf·cm)	Ⓖ 1.5 ± 0.15 N·m (15 ± 1.5 kgf·cm)
Ⓓ 0.45 ± 0.05 N·m (4.5 ± 0.5 kgf·cm)	Ⓗ 0.3 ± 0.5 N·m (3.0 ± 0.5 kgf·cm)

Replacement Parts List

Note : Important Safety Notice
Components identified by ⚠ mark have special characteristics important for safety.
When replacing any of these components, use only manufacturer's specified parts.

CF-31ATAAXDM

REF. NO and AREA	PART NO.	DESCRIPTION		Q'TY
Main Block Unit				
E1	DL3UP1897BAA	PCB, MAIN CF-31MK1	RTL	1
E2	DL31U1807AAA	PCB, WWAN	RTL	1
E3	DL32U1807AAA	PCB, USB	RTL	1
E4	DL33U1807AAA	PCB, KBD	RTL	1
E5	DL34U1807AAA	PCB, BT	RTL	1
E6	DL35U1807AAA	PCB, EXT ANT	RTL	1
E7	DL3UP1808AAA	MP FPC UNIT		1
E8	DL3UP1814AAA	HDD ETC FPC UNIT		1
E9	DL3UP1815AAA	BATTERY FPC UNIT		1
E10	DL3UP1827AAA	TOUCH SCREEN CONTROLLER UNIT		1
E13	CR-2032/K5GK	LITHIUM COIN BATTERY		1
E15	DFJK10T040BG	FFC		1
E16	DFJK40T030DG	FFC KBD		1
E17	DFJS1046YB	LAN CABLE		1
E18	DFJS1248ZA	CABLE ASSY		1
E19	K1NA26Z00002	EXPRESS CONNECTOR		1
E20	K1NA68Z00012	PCMCIA CONNECTOR		1
E21 ⚠	N5HZC0000049	WIRELESS LAN MODULE		1
E22	DFJS1233ZA	LCD CABLE		1
E23 ⚠	N3CAYYY00068	HDD		1
E24	N2ABZY000152	KEYBOARD US	NRP	1
E25	N5ZZ00000186	DDR3-SO-DIMM		1
E26	DFWV84A0347	TOUCH PANEL KIT		1
E26-1	N2BAAYY00062	TOUCH PANEL		1
E26-2	DFHR3P59ZA	PROTECTIVE FILM	NRP	1
E26-3	DFHP7381ZA	TS TAPE	NRP	1
E27	DFUP1810ZA	FPC		1
E28	DFUP1811ZA	FPC		1
E29	DFUP1812ZA	FPC		1
E30	DFUP1813ZA	FPC		1
E31	DFUP1839ZA	FPC		1
E32	DFWV08A0132	LCD UNIT ASSY		1
E32-1	L5EDDYY00145	LCD		1
E32-2	DFHR3P60ZA	FILM	NRP	1
E32-3	DFHG2230ZA	LCD DMP SHEET SIDE	NRP	2
E32-4	DFHG2228ZA	LCD DMP SHEET TOP	NRP	1
E32-5	DFHG2229ZA	LCD DMP SHEET BOTTOM	NRP	1
Accessories				
A1 ⚠	DFQW5375ZA	(E)MANUAL		1
A2 ⚠	K2CG3DR00003	AC CORD		1
A3 ⚠	CF-AA5713AM1	AC ADAPTOR		1
A4	DFHR6207ZA	PEN		1
A5	DFME0148YA	PEN TETHER		1
A6 ⚠	NCR-B/916A	LIT-ION RECHARGEABLE BATTERY		1
A7	DFHS9021ZA	TOUCH PANEL CLOTH		1
A8	DFQM8604LA	WINDOWS 7 PROFESSIONAL RECOVERY DVD 32BI		1

Packing Material				
P1		DFPH0064ZA	PACKING PAPER	1
P2		DFPP0143ZA	PROTECTION BAG	1
P3		DFPK1291ZAP	PACKING CASE	1
P4		DFPK1292ZA	SET HOLDER	1
P5		DFPK1293ZA	ACCESSORY BOX	1
Mechanical Parts				
K1		DFWV99A0156	HDD MOUNTING KIT	1
K1-1		DL3UP1809AAA	HDD PACK FPC UNIT	1
K1-2		DFMD8041YA	HDD L CASE ASSY	1
K1-3		DFMD8042YA	HDD U CASE ASSY	1
K1-4		DFHR8540ZA	HDD DAMPER	1
K1-5	⚠	L9DZYY000011	HDD HEATER	1
K1-6		DFMY0535ZA	HDD HEAT SPREADER NRP	1
K1-7		DFMX1265ZB	HEATER INS SHEET	1
K1-8		DFHR3M40ZA	HDD FPC PROTECT SHEET NRP	1
K1-9		DFHR8541ZA	HDD SIDE D ASSY NRP	1
K1-10		DFHR6264ZA	SATA GUARD	1
K1-11		DFMX0383TA	INSULATION PARTS NRP	1
K1-12		DRQT2+E8FKL	SCREW NRP	4
K1-13		DFHE5025XAK	SCREW NRP	1
K2	⚠	DFKF8183ZA-0	LCD FRONT ASSY	1
K2-1	⚠	DFKF0310ZA-0	LCD FRONT	1
K2-2		DFBH1197ZA	HINGE R	1
K2-3		DFBH1196ZA	HINGE L	1
K2-4		DRYN4+J10KLT	SCREW	2
K2-5		DFHR3P84ZA	TS DMP SHEET NRP	8
K2-6		DFHR3P96ZA	WEB WP SHEET NRP	1
K2-7		DFQT7123ZAT	PART SERIAL LABEL	1
K3		TPD-X0033A	PET TAPE(19mmX30mm) NRP	1
K4		DFHR3P97ZA	CABLE WP SHEET LCD NRP	1
K5		DFHR3P98ZA	CABLE WP SHEET BASE NRP	1
K6		DFBS8004ZA-0	LCD LATCH ASSY	1
K6-1		DFHR6313ZA	LCD LATCH SLIDER	1
K6-2		DFBS0081ZA-0	LCD LATCH	1
K7		DFDF5030ZA	LCD LATCH SHAFT	1
K8		DFUN0094ZA	LCD LATCH SPRING	1
K9		DFHE0358ZA	MODEM CONDUCTIVE TAPE NRP	1
K10		DFHE1082ZA	GASKET NRP	2
K11	⚠	DFKM8211ZA-0	LCD REAR ASSY	1
K12		DFGB0131YA-0	PANASONIC BADGE NRP	1
K13		N1ZYYY000047	ANTENNA ASSY	1
K14		N1ZYYY000048	ANTENNA ASSY	1
K15		DFHR3P85ZA	REAR CABLE SHEET NRP	2
K16	⚠	DFKE1019ZA-0	LCD DMP SIDE COVER R	1
K17	⚠	DFKE1018ZA-0	LCD DMP SIDE COVER L	1
K18		DFHE0843ZA	LCD MAGNET NRP	1
K19		DFHR6532ZA-0	ANTENNA COVER R	1
K20		DFHR6531ZA-0	ANTENNA COVER L	1
K21	⚠	DFKE1024ZA	KB CABLE COVER	1
K22		DFHG2232YA	KB CABLE COVER CUSHION NRP	1
K23	⚠	DFKE1023ZA	LCD CABLE HOLDER	1
K24		DFHE0954YA	GASKET(HDD) 65TSV7-7-10 NRP	1
K25		DFHG2231ZA	LCD CABLE COVER WP SHEET NRP	1
K26	⚠	DFKE1022ZA-0	DIMM COVER	1
K27		DFHG2233ZA	DIMM COVER CUSHION NRP	1
K28		DFHR6526ZA	ANTENNA CABLE WP HOLDER	1
K29		DFHR3Q07ZA	ANTENNA CABLE WP HOLDER TAPE NRP	1
K30		DFHR3Q05ZA	ANTENNA CABLE WP SHEET NRP	1

K31	DFHR6550YA	DIMM COVER SPACER	NRP	1
K32 ⚠	DFKF8182ZA-0	BOTTOM CASE ASSY		1
K32-1 ⚠	DFKF0309ZA-0	BOTTOM CASE		1
K32-2	DFGE0087ZAT	BOTTOM CASE CUSHION		1
K32-3	DFUS0324ZA	MP ESD SPRING		1
K32-4	DRQT26+E3KLT	SCREW		2
K32-5	DFGE0190ZA	BOTTOM CASE SHEET		1
K33	DFHR3Q93ZA	HDMI CUSHION 10X10	NRP	1
K34	DFHR3P99YA	COIN BATT HOLDER SHEET	NRP	1
K35	PD-X0034A	PET TAPE(10mmX80mm)	NRP	1
K36	DFMY0525ZA	PCH HEAT SPREADER	NRP	1
K37	DFHR3B19ZA	HINGE BACKUP SHEET T4	NRP	3
K38	DFHG2287ZA	MAIN PWB CUSHION	NRP	1
K39	DFMC0964ZA	WLAN SHEILD SHEET	NRP	1
K40	DFHR3Q26YA	DIMM MAIN CUSHION	NRP	1
K41	DFHR3Q22YA	KBD SPACER SHEET	NRP	1
K42	DFMX0634ZA	EDGE TAPE	NRP	1
K43	DFHR6246ZA	HDD GUIDE		2
K44	DFMD7C28ZA	HDD FPC HOLDER		1
K45	DFHR6247ZB	BATT GUIDE		1
K46	DFHR8521ZA	BATT CN PIN CUSHION		2
K47	DFHM0396ZA	BATT CN PIN		2
K48	TPD-X0034A	PET TAPE(10mmX30mm)	NRP	1
K50 ⚠	DFKM8210ZA-0	TOP CASE ASSY		1
K50-1	DF31U1803AAA	PCB, IO TW	RTL	1
K50-2	DF32U1803AAA	PCB, PAD SW TW	RTL	1
K50-3	DF33U1803AAA	PCB, PSW LED TW	RTL	1
K50-4	DF3UB1824AAA	SUB3 PWB UNIT TW		1
K50-5 ⚠	DFKE0876ZB	SPEAKER CASE B		1
K50-6 ⚠	DFKE0856ZB-0	SPEAKER CASE A		1
K50-7	DFHG1892YA	SPEAKER CASE CUSHION		1
K50-8	DFHR3Q90ZA	SP SPACER SHEET		1
K50-9 ⚠	DFKM0580ZA-0	TOP CASE		1
K50-10	DFHR3Q16ZA	SIDE USB SPACER SHEET	NRP	1
K50-11	DFHR3D56ZA-0	CN COVER SHEET	NRP	1
K50-12	DFHG1891ZA	HANDLE ARM CUSHION	NRP	2
K50-13	DRQT26+E3KLT	SCREW		14
K50-14	DRQT26+E5KLT	SCREW		10
K50-15	DFUQ0102ZA	POTRE SPRING		2
K50-16	DXSB26+4FNLT	SCREW		2
K50-17	DFHM0419YA	LCD FOOT CAP		2
K50-18	DFHG1699ZA	LCD LOCK SHEET	NRP	2
K50-19	DRQT26+E3NLT	SCREW		7
K50-20	DFKH8011ZA-0	HANDLE ASSY		1
K50-21	DFBD8001ZA-0	POWER SW ASSY		1
K50-22	DFKH5023ZA-0	HANDLE BASE L		1
K50-23	DFKH5024ZA-0	HANDLE BASE R		1
K50-24	DRSN4+6FKLT	SCREW		2
K50-25 ⚠	DFKE8207ZA-0	HDD COVER ASSY		1
K50-26	DFHR6291YB-0	FRONT BELT COVER		2
K50-27	DFMD2170YA	KENSINGTON PLATE		1
K50-28	DFHR6089YA-0	HANDLE ARM BUSH		4
K50-29	DFHR3P88ZA	POWER SW SHEET	NRP	1
K50-30	DRHM0118ZAT	SCREW		2
K50-31	DFHR3P89ZA	PAD FPC SHEET	NRP	1
K50-32	DFHR3Q41YA	BATT CUSHION	NRP	1
K50-33	DFHR3Q40ZA	BATT SLIDE SHEET	NRP	1
K50-34	DFHR3Q15ZAT	FAN TOP CUSHION TW	NRP	4
K50-35	DFHR3643ZAT	TP BOTTOM TAPE	NRP	1

K50-36		DFHR6514ZA-0	POWER SW LED PANEL	1
K50-37		DFWP0159ZA	FPC LED	1
K50-38		DFHR3Q10ZA	LED 7 SPACER	1
K50-39		DFHR6355ZA	TP SW KNOB IN	1
K50-40		DFHG1901ZA-0	TOUCH PAD SW RUBBER	1
K50-41		DFHR3P86ZA	PAD SW SHEET NRP	1
K50-42		DFHR3P87ZA	PW LED SHEET NRP	1
K50-43		DFHR6511ZA-0	PALM TOP COVER	1
K50-44		DFHR6354ZA-0	MIC JACK HOLDER	1
K50-45		DFHE5058ZBT	SCREW(HEXAGON)	4
K50-46		DRHM5104ZAT	SCREW	3
K50-47		DXHM0057ZA	SCREW	2
K50-48		DFHE5025XAT	SCREW	2
K50-49	⚠	DFKE1016ZA	WIRELESS SW COVER	1
K50-50	⚠	DFKE1017ZA	WIRELESS SW COVER SMC BLANK	1
K50-51		DFBD0207ZA-0	WIRELESS SW KNOB	1
K50-52		XTB2+6JFK	SCREW	1
K50-53	⚠	DFKE8205ZA-0	MP COVER ASSY	1
K50-54	⚠	DFKE8208ZA-0	CN COVER ASSY	1
K50-55	⚠	DFKE8209ZA-0	MP LATCH ASSY	1
K50-56	⚠	DFKE8210ZA-0	CN LATCH ASSY	1
K50-57	⚠	DFKE8206ZA-0	BATT COVER ASSY	1
K50-58		L0AA04C00016	SPEAKER	1
K50-59		N2EABEC00006	TOUCHPAD	1
K51		DFHR3E98ZA	KB WP SHEET NRP	1
K52		DFHR9171ZA	SERIAL COVER ASSY	1
K53		DFHR3Q17ZA	PALM TOP SHEET NRP	1
K54		DFMD4080ZA-0	SERIAL CN HINGE PLATE	1
K55		DFGP0203ZA	PALM TOP COVER SHEET NRP	1
K56		DFHR9172ZA	HDMI COVER ASSY	1
K57		DFHR3Q03WA	SERIAL COVER WP SHEET NRP	1
K58		DFHR9176ZA	LAN COVER ASSY	1
K59		DFHR3Q04WA	SIDE IO COVER WP SHEET NRP	1
K60		DFHR9173ZA	CONFIG COVER ASSY	1
K61		DFHR9175ZA	USB COVER ASSY	1
K62		DFHR9174ZA	DC-IN COVER ASSY	1
K63		DFMD4081ZA-0	CN CONFIG HINGE PLATE	1
K64		DFHR3Q98YA	DC WP SHEET NRP	1
K65		DFHR6530ZA-0	FAN COVER	1
K66		N1ZYYY000049	ANTENNA ASSY	1
K67		DFHG2288ZA	SUB ANT RUBBER NRP	1
K68		DFMY0530ZA	SUB HP HEAT RUBBER	1
K69		DFHR3Q14ZA	FAN HP TOP CUSHION NRP	2
K70		DFMY0531ZA	VGA HEAT RUBBER UPPER	1
K71		DFMY5054ZA	HEATSINK	1
K72		DFMY0527ZA	CPU HEAT RUBBER	1
K73		L6FCYYYD0007	FAN	1
K74		DFHG2226ZA	FAN RUBBER A	1
K75		DFHG2227ZA	FAN RUBBER B	1
K76		DFHR3Q58ZA	FAN BOTTOM CUSHION NRP	2
K77	⚠	DFKE8211ZA	FAN COVER ASSY	1
K78		DFMD7C29YA	FAN FILTER	1
K79		DFHR3Q48ZA	EX CARD EDGE SHEET NRP	1
K80		DFHR3D21YA	LINE HOLD SHEET 1 NRP	4
K81		TPD-X0033A	PET TAPE(19mmX30mm) NRP	1
K82		DFHR6529ZA	HDD CABLE COVER	1
K83		DFHR3Q23YA	CABLE FIX SHEET NRP	1
K84	⚠	DFKE0999ZA	MP CASE	1
K85		DFHR3Q01ZA	MAIN SEPARATER SHEET NRP	1

K86	DFHE1187ZA	GASKET 8X10.5X8	NRP	1
K87 ⚠	DFKE0996ZA	MAIN CHASIS		1
K88	DFHE1186ZA	GASKET 5X2X50	NRP	1
K89	DFHE1125ZA	HDD GASKET	NRP	1
K90	DFHE1185ZA	GASKET 4X3X8	NRP	3
K91 ⚠	DFKE1015ZA	1ST LAN SLOT		1
K92 ⚠	DFKE1014YA	CONFIG USB ONLY HOLDER		1
K93	DFHR3R06ZA	LAN SPACER SHEET	NRP	1
K94	DFHR6528ZA	DIMM STOPPER		1
K95	DFMY0524YA	DIMM HEAT SPREADER	NRP	1
K96	DFHR3Q27YA	DIMM STOPPER CUSHION	NRP	1
K97	DFHE0548ZA	GPRS H-P-E-CLOTH	NRP	1
K98	DFHR6446ZA	MINI CRAMP_5	NRP	1
K99	DFHR6525ZA	LCD CABLE HOLDER		1
K100	DFHR3Q15ZA	FAN TOP CUSHION	NRP	1
K101	N1ZYYY000050	ANTENNA ASSY		1
K102 ⚠	DFKE1025ZA-0	HINGE COVER		2
K103	DFHE1040ZA	GASKET-65TSV 10-10-8		1
K104 ⚠	DFKE1021ZA	ANTENNA CABLE COVER		1
K105	DFHR3Q06ZA	ANTENNA CABLE WP ANGLE SHEET	NRP	1
K106	DFHE1082ZA	GASKET		2
K108	DFHR6512ZA-0	KB COVER		1
K109	DFHR6527ZA	ANTENNA CABLE HOLDER		1
K110	DFMX0383TA	INSULATION PARTS	NRP	7
K111	DFMC0965ZA	BUSTERAIDE 8X12X0.5	NRP	1
K112	DFMY0526YA	W-LAN HEAT SPREADER	NRP	1
K113	DFMX1468YA	BT INS SHEET	NRP	1
K114 ⚠	DFKE1011ZA	SIM SLOT		1
K115	DFHG370YA	FOOT RUBBER	NRP	4
K116 ⚠	DFGT1373ZA	RATING SHEET	NRP	1
K117	DFQT0101ZA	CORE I5 VPRO LABEL		1
K118	DFQT0045ZA	ENERGY STAR LABEL		1
K119	DFGB0165XB-0	TOUGH BADGE NEW		1
K120	DFQX3A14XA	COA LABEL WIN7 PROFESSIONAL	NRP	1
K121	DFQT0055XA	COA SERIAL LAMINATE	NRP	1
K127	DFQT0092ZA	WINDOWS 7 LOGO LABEL		1
K128	DFHR3Q42ZA	CABLE FFC GUIDE	NRP	1
K129	DFQT0109ZA	BLIND LABEL CE MARK	NRP	1
K130 ⚠	DFMC0723ZA	CPU ANGLE CONDUCTIVE TAPE	NRP	1
K131	DFHR3R07ZA	LCD CABLE EMI TAPE	NRP	1
K132	DFMC0867ZA	EMI CLOTH	NRP	1
N2	DRSB26+10HKL	SCREW		10
N3	DRSB4+10FKL	SCREW		2
N4	DRQT2+E8FKL	SCREW		2
N5	XSB2+3FNL	SCREW		4
N6	DRQT26+E3FKL	SCREW	NRP	2
N7	DXQT2+D4FNL	SCREW	NRP	10
N8	DRHM5025YA	SCREW	NRP	2
N9	DRSB2+10FKL	SCREW	NRP	2
N10	DRSB26+8HKK	SCREW		1
N11	DRYN4+J10FKL	SCREW		4
N12	DXSB4+15FNMB	SCREW		2
N13	DRHM5054XA	SCREW		1
N14	DRQT26+E4FKL	SCREW		61
N15	DRQT26+E6FKL	SCREW		28
N16	DRSB26+3FKL	SCREW		2
N17	DRQT2+G6FKL	SCREW		2

Replacement Parts List

Note: Important Safety Notice
Components identified by ⚠ mark have special characteristics important for safety.
When replacing any of these components use only manufacturer's specified parts.

CF-31ATAAXDM

REF. NO and AREA		PART NO.	DESCRIPTION	Q'TY
MAIN PCB				
C 1, 2, 3, 4, 5, 11, 12, 13, 14, 21, 24, 26, 27, 35, 38, 43, 44, 46, 47, 48, 49, 51, 52, 53, 54, 55, 60, 61, 62, 64, 65, 66, 67, 99, 100, 101, 168, 169, 178, 179, 221, 223		F1H0J106A043	CAPACITOR, 6.3V, 10µ	42
C 6, 108, 165, 166, 167, 214, 216, 218, 219, 274, 275, 286, 295, 296, 320, 391, 404, 412, 417, 422, 442, 492, 497, 500, 501, 511, 566, 644, 823, 889		F1J1A106A043	CAPACITOR, 10V, 10µ	30
C 7, 8, 9, 10, 17, 28, 29, 30, 31, 33, 34, 36, 42, 45, 63, 71, 72, 73, 74, 80, 81, 82, 83, 84, 85, 86, 87, 88, 89, 90, 91, 92, 93, 94, 95, 98, 103, 104, 105, 106, 107, 118, 149, 150, 151, 152, 153, 154, 155, 156, 157, 158, 159, 160, 161, 162, 163, 164, 170, 172, 173, 174, 175, 176, 177, 180, 182, 184, 185, 186, 188, 190, 191, 192, 193, 212, 222, 224, 225, 226, 227, 233, 242, 262, 293, 294, 297, 354, 368, 369, 385, 411, 474, 475, 491, 588, 599, 632, 718, 719, 720, 721, 722, 723, 725, 726, 761, 762, 763, 764, 765, 766, 767, 768, 769, 770, 771, 772, 773, 774, 775, 776, 780, 781, 782, 783, 784, 785, 787, 788, 789, 790, 791, 792, 793, 794, 796, 797, 798, 799, 800, 801,		F1G0J105A035	CAPACITOR, 6.3V, 1µ	147
C 15, 19, 25, 32, 37, 40, 41, 56, 68, 69, 70, 75, 76, 79, 96, 102, 145, 146, 147, 171, 181, 183, 187, 189, 213, 215, 245, 662, 778, 829		F1J0J2260004	CAPACITOR, 6.3V, 22µ	30

C 16, 22, 23, 50, 58, 59, 110, 111, 194, 195, 206, 207, 209, 210, 229, 232, 234, 235, 236, 237, 238, 239, 243, 244, 246, 247, 248, 249, 250, 251, 252, 253, 254, 255, 256, 257, 258, 259, 269, 276, 277, 283, 285, 302, 306, 317, 318, 319, 327, 328, 329, 330, 331, 332, 333, 334, 335, 339, 340, 347, 352, 353, 356, 357, 358, 359, 360, 361, 383, 386, 392, 393, 395, 398, 407, 409, 413, 414, 415, 416, 418, 419, 420, 433, 436, 438, 439, 440, 441, 445, 448, 449, 451, 452, 461, 463, 470, 472, 479, 480, 481, 482, 485, 489, 490, 495, 498, 499, 502, 506, 508, 510, 512, 549, 595, 596, 598, 626, 637, 639, 643, 663, 664, 666, 668, 671, 672, 673, 675, 678, 702, 706, 715, 728, 730, 733, 743, 795, 817, 818, 820, 822, 824, 826, 827, 828, 865, 873, 874, 879, 880, 881, 882, 883, 884, 885, 886, 892, 893, 894, 898, 921, 922, 923, 924, 925,		F1G1C104A048	CAPACITOR, 16V, 0.1µF	193
C 18, 20, 39, 57, 97, 197, 198, 199, 202, 203, 204, 205, 208, 211, 220, 230, 231, 310, 313, 338, 342, 362, 363, 364, 365, 373, 374, 376, 377, 384, 397, 399, 400, 405, 406, 423, 435, 437, 443, 447, 547, 557, 569, 583, 586, 676, 704, 887, 917, 1250		F1G1E103A062	CAPACITOR, 25V, 0.01µF	50
C 196, 270, 271, 272, 273, 282, 284, 305, 307, 370, 394, 477, 521, 522, 640, 641, 642, 665, 686, 687, 713, 779, 825, 933,		F1H1A105A092	CAPACITOR, 10V, 1µ	25
C 200, 201		F1G1H3R0A543	CAPACITOR, 50V, 3pF	2
C 260, 261, 653		F2H0D221A006	CAPACITOR, 2V, 220µF	3
C 264, 292, 657, 681, 682, 731		EEFSX0D331ER	CAPACITOR, 2V, 330µF	6
C 265, 291, 300, 301, 525, 526, 527, 528, 535, 536, 537, 538, 539, 540, 541, 542, 556, 571, 597, 628, 654, 655, 656, 683, 684, 698, 699, 708, 712, 902		F1K1E1060001	CAPACITOR, 25V, 10µF	30
C 266		F1L3D1020008	CAPACITOR, 2kV, 1000pF	1
C 267, 629		F1G1H680A542	CAPACITOR, 50V, 68pF	2
C 268, 287, 558, 567, 630, 714		F1H1C224A074	CAPACITOR, 16V, 0.22µF	6
C 279, 289, 631, 651		F1G1H182A496	CAPACITOR, 50V, 1800pF	4

C 280, 450, 560, 600, 602, 606, 607, 627, 635, 707		F1H1H104A748	CAPACITOR, 50V, 0.1µF	10
C 281, 288, 290, 337, 426, 562, 570, 638, 650, 652		F1G1H1010005	CAPACITOR, 50V, 100pF	10
C 311, 312, 584		F1G1H271A495	CAPACITOR, 50V, 270pF	3
C 314, 387		F1G1C473A004	CAPACITOR, 16V, 0.047µF	2
C 315, 316, 344		F1G1H472A496	CAPACITOR, 50V, 4700pF	3
C 321, 322, 323, 324, 325, 587		F1J1E105A080	CAPACITOR, 25V, 1µF	6
C 326		F1G1C104A042	CAPACITOR, 16V, 0.1µF	1
C 366, 367		F1G1H5R0A543	CAPACITOR, 50V, 5pF	2
C 375, 543, 544, 550, 608, 700		F1G0J224A001	CAPACITOR, 6.3V, 0.22µF	6
C 380, 381, 382, 389, 408, 410, 421, 453, 454, 455, 456, 457, 458, 459, 460, 462, 471, 513, 519, 561, 563, 568, 680, 689, 690, 703, 819		F1G1H102A496	CAPACITOR, 50V, 1000pF	27
C 396, 476, 483, 484, 486, 609, 716, 727, 777		F1J0J475A009	CAPACITOR, 6.3V, 4.7µF	9
C 487, 488		F1G1H100A544	CAPACITOR, 50V, 10pF	2
C 494, 504		F1G1H6R0A544	CAPACITOR, 50V, 6.0pF	2
C 496, 633, 634, 872		F1H1A225A025	CAPACITOR, 10V, 2.2µF	4
C 503		ERJ2GEJ103X	RESISTOR, 1/16W, 10KΩ	1
C 507		F1G1H8R0A544	CAPACITOR, 50V, 8pF	1
C 509		F1G1H7R0A544	CAPACITOR, 50V, 7.0pF	1
C 514		F1G1H270A542	CAPACITOR, 50V, 27pF	1
C 515		F1G1H151A495	CAPACITOR, 50V, 150pF	1
C 516, 518, 691, 692, 694		F1G1H331A496	CAPACITOR, 50V, 330pF	5
C 517		F1G1H391A496	CAPACITOR, 50V, 390pF	1
C 520, 688		F1G1H222A496	CAPACITOR, 50V, 2200pF	2
C 523, 524, 582, 649, 685		F1J1E334A081	CAPACITOR, 25V, 0.33µF	5
C 531, 532, 533, 534		EEFSX0D471XE	CAPACITOR, 2V, 470µF	4
C 545		F1G1H220A542	CAPACITOR, 50V, 22pF	1
C 546		F1G1E562A062	CAPACITOR, 25V, 5600p	1
C 548		F1G1H122A496	CAPACITOR, 50V, 1200pF	1
C 554, 900		EEFCX0J101R	CAPACITOR, 6.3V, 100µF	2
C 559		F1G1H560A542	CAPACITOR, 50V, 56pF	1
C 564		F1G1H471A496	CAPACITOR, 50V, 470pF	1
C 565		F1G1H330A542	CAPACITOR, 50V, 33pF	1
C 572, 890, 891		EEFCX0G151R	CAPACITOR, 2V, 150µF	3
C 601		F1L1E106A017	CAPACITOR, 25V, 10µF	1
C 645, 646, 647, 648		F1J2A103A018	CAPACITOR, 100V, 0.01µF	4
C 679		F1G1A683A014	CAPACITOR, 10V, 0.068µF	1
C 693		F1G1H390A542	CAPACITOR, 50V, 39pF	1
C 695, 696, 896, 897		F1G1H681A496	CAPACITOR, 50V, 680pF	4
C 705		F1G1H181A495	CAPACITOR, 50V, 180pF	1
C 709, 710, 711		F1L1C106A008	CAPACITOR, 16V, 10µF	3
C 717		F1G1H221A496	CAPACITOR, 50V, 220pF	1
C 1071, 1072, 1152, 1195, 1196, 1222, 1223, 1224, 1225, 1226, 1227, 1228, 1229, 1244, 1245, 1246, 1248, 1249		ERJ2GE0R00X	RESISTOR, 1/16W, 0Ω	18
CF 1, 5		D4CC11030026	THERMISTOR	2
CN 1		K1MN60AA0018	FPC CN	1
CN 2, 13, 30		K1MN40AA0018	CONNECTOR	3
CN 3, 5		K1MN20AA0018	FPC CN 20PIN	2

CN 7, 8		K1MN50BA0059	CONNECTOR	2
CN 9		K1MN15AA0018	FPC CN 15PIN	1
CN 10		K1MN80BA0246	CONNECTOR	1
CN 11		K1MN40BA0059	CONNECTOR	1
CN 12		K1MN20BA0059	CONNECTOR	1
CN 16		K1KB40AA0049	CONNECTOR	1
CN 19		K1KA02AA0051	CONNECTOR	1
CN 20		K1KA08AA0266	CONNECTOR	1
CN 21		K1MYL4B00002	DDR3 SO-DIMM SOKET UPPER	1
CN 22		K1MYL4B00001	DDR3 SO-DIMM SOKET LOWER	1
CN 24		K1KB12A00099	CONNECTOR	1
CN 29, 47		K1MN12AA0018	CONNECTOR	2
CN 37		K1MY52B00003	CONNECTOR	1
CN 1002		K1FY119E0019	HDMI CONNECTOR	1
D 2, 3, 7, 19		B0JCDD000001	DIODE, SHOTKEY BARIEEER	4
D 4		B0JDBE000002	DIODE	1
D 5, 6, 8, 9, 10, 11, 12, 13, 14, 20, 21, 22, 50, 51		B0ADCJ000041	DIODE	14
D 23, 24, 28, 58		B0JCRD000015	DIODE	4
D 25, 27, 30, 32, 33, 603		B0JCMD000046	DIODE	6
D 26, 29, 31		B0ADCJ000025	DIODE	3
D 34, 42, 49		B0ACCK000003	DIODE	3
D 35, 36, 37, 38, 39, 41, 57, 62, 63		B0BC6R100010	ZENER DIODE	9
D 44		B0JCSE000006	DIODE	1
D 46, 54		B0KB00000044	DIODE	2
D 47		B2ABAM000002	DIODE	1
D 55		B0ADCJ000026	DIODE	1
D 600		B0JDSD000025	DIODE	1
D 601		B0BC7R500001	ZENNER DIODE	1
D 602		B0BC01700015	DIODE	1
D 604		B0JCCE000008	DIODE	1
F 1, 7	⚠	K5H502Z00003	FUSE, 5A, 32V	2
F 2, 4, 5, 6, 8, 15, 16, 18	⚠	K5H202Z00005	FUSE, 2A, 32V	8
F 3	⚠	K5H402Z00003	FUSE, 4A, 32V	1
F 9, 12, 14, 17	⚠	ERBSE0R50U	FUSE, 0.5A, 32V	4
F 10	⚠	K5H123Y00001	FUSE, 12A, 65V	1
F 11	⚠	K5H153A00001	FUSE, 15A, 65V	1
IC 1		C2GBD0000070	CPU	1
IC 3		C1CB00003375	CLOCK GENERATOR FOR INTEL PLATFORM	1
IC 4		C1CB00003392	PCH(CORE CHIP)	1
IC 5		C1CB00003393	LAN CONTROLLER	1
IC 6, 15		C0JBAE000322	LOGIC IC	2
IC 7, 9		C0EBE0000459	IC	2
IC 8, 54, 63, 64, 66		C0JBAA000345	IC, LOGIC	5
IC 10, 14, 17, 18, 113		C0JBAA000381	IC, LOGIC	5
IC 11, 102		C0DBAYY00752	2CH SWITCHING POWER	2
IC 12		C0DBFYY00190	ﾚｷﾞｭﾚｰﾀ	1
IC 13		C0DBALH00003	IC	1
IC 16, 114		C0JBAZ002192	IC	2
IC 19, 65, 101, 739, 748		C0JBAB000621	IC, LOGIC	5
IC 23, 79, 80, 88		C0JBAZ002836	IC, LOGIC	4
IC 24		C0DBZYY00348	PC CARD POWER SWITCH	1
IC 25		C0ZBZ0000978	IC	1
IC 27		C3FBPY000196	64M-BIT FLASH MEMORY	1
IC 28		C2CBYY000639	IC	1
IC 29		C0CBCBC00130	IC, REGURATOR	1

IC 30		C1CB00003377	SOUND CODEC	1
IC 31		C0JBAS000215	IC, GATE LOGIC	1
IC 32, 43, 61, 62, 108		C0JBAA000362	IC, LOGIC	5
IC 33		C0ABZA000084	AMP	1
IC 36		C0EBY0000419	IC, VOLTAGE DETECTOR	1
IC 38, 39		C0DBZYY00347	USB POWER SW	2
IC 40		C0DBAYY00762	DC/DC IC	1
IC 41		C0DBEYY00116	REGULATOR	1
IC 42		C0EBY0000637	VOLTAGE DETECTOR(RESET IC)	1
IC 44		C0EBY0000420	VOLTAGE DETECTOR	1
IC 45		C0DBDYY00020	IC	1
IC 46		C0JBAU000031	LOGIC IC	1
IC 47, 701		C3EBDY000025	EEPROM	2
IC 50		C1CB00003064	IC, CARD BUS CONTROLLER	1
IC 51		C1CB00003376	SUPER IO	1
IC 52		C0DBGYY00600	REGULATOR	1
IC 56		C0JBAE000321	IC, LOGIC	1
IC 67		C1CB00003086	SECURITY CHIP	1
IC 70		C0ABGA000072	OP AMP	1
IC 77		C1CB00002585	IC	1
IC 78		C0EBH0000457	IC	1
IC 84		C0JBAZ002837	IC, LOGIC	1
IC 85		C0JBAC000367	IC, LOGIC	1
IC 92		C1CB00003388	USB HUB	1
IC 100, 753		C0JBAC000363	GATE LOGIC	2
IC 105		C0ABZA000047	IC, AMP	1
IC 110, 755		C0JBAB000624	IC	2
IC 126		C0DBAYY00759	DC/DC IC	1
IC 127		C0DBZYY00265	POWER MANAGEMENT SWTICH	1
IC 740		C1CB00003065	LAN SWITCH	1
IC 752		C0JBAZ002422	IC, FET SWITCH	1
IC 754		C1CB00003380	FLAT PAD CONTROL IC	1
IC 1002		C1CB00003257	ﾚﾍﾞﾙｼﾌﾀｰ	1
IC 1014, 1015		C0JBAZ003024	SWITCH IC	2
JK 1	⚠	K2EEYB000001	JACK	1
L 1		G1C1R0MA0211	CHIP INDUCTOR	1
L 2		J0JJC0000022	DC POWER LINE BEADS	1
L 3, 4, 5, 6, 7, 17, 18		J0JYC0000098	DC POWER LINE BEADS	7
L 8, 9		J0JAD0000028	CHIP COMMON MODE CHALK COIL ARRAY	2
L 10, 15, 16		J0JCC0000186	INDUCTOR	3
L 11, 14		ERJ3GEY0R00V	RESISTOR, 1/10W, 0Ω	2
L 12, 20, 27, 46, 1031		J0JJC0000015	INDUCTOR	5
L 13, 19, 23, 28, 30, 42, 44, 45, 48		J0JHC0000078	DC POWER LINE BEADS	9
L 21, 22, 602		G1C4R7MA0240	CHOK COIL	3
L 26, 100, 101, 102, 103		J0MAB0000236	CHIP COMMON MODE CHALK COIL	5
L 31, 32		G1C100M00038	INDUCTOR	2
L 33, 34		G1CR36ZA0244	COIL	2
L 35		G1C1R8ZA0124	COIL	1
L 36, 38		G1C2R8MA0240	COIL	2
L 37, 39		G1CR56ZA0244	COIL	2
L 53, 600, 601		J0JKC0000007	INDUCTOR	3
L 700		J0MAB0000200	INDUCTOR	1
L 1032, 1033, 1034, 1035		J0MAB0000229	ｺﾓﾝﾓｰﾄﾞﾁｮｰｸｺｲﾙ	4
PA 6, 1000	⚠	D4FB1R100015	OVER CURRENT PROTECTOR	2

Q 1, 3, 6, 10, 11, 12, 13, 43, 50, 53, 54, 75, 131, 135, 142, 144, 200, 606, 609, 1008, 1011		B1CFGD000023	TRANSISTOR	21
Q 2		B1MBDCA00004	TRANSISTOR	1
Q 4, 17, 25, 39, 57, 59, 63, 64, 101, 118, 119, 121, 123, 125, 134, 143, 150, 731, 734		B1GDCFNN0031	TRANSISTOR	19
Q 5, 8, 22, 23, 24, 33, 48, 58, 60, 84, 85, 103, 117, 120, 122, 124, 133, 147, 151, 600, 601, 603, 605,		B1GBCFJN0037	TRANSISTOR	24
Q 7, 100		B1GFCFNN0022	BIAS RESISTOR TRANSISTOR	2
Q 9, 47, 49, 76, 102, 127		B1DHDC000028	TRANSISTOR	6
Q 16, 30, 31, 61, 62, 79, 89, 90, 95, 99, 107, 109, 126, 129, 130, 132, 139, 141, 148, 149, 157, 160, 161, 162, 168, 169, 170,		B1GBCFNN0042	TRANSISTOR	28
Q 18, 19, 36, 37, 67, 74, 116, 180		B1CFRD000014	FET	8
Q 20, 32, 34, 35		B1CFRD000041	FET	4
Q 21		B1CFND000011	FET	1
Q 26, 28, 38		B1DDED000004	TRANSISTOR, FET	3
Q 27, 86		B1MBFDA00008	FET	2
Q 40, 41, 42, 44, 45		B1GHCFYY0034	TRANSISITOR	5
Q 46, 52, 55, 56, 65, 66, 70, 71, 72, 73, 156		B1CFRD000034	FET	11
Q 51, 165		B1CFRD000044	FET	2
Q 77, 78, 181, 182		B1CFRD000050	FET	4
Q 87, 105, 113, 136, 604, 607		B1CHRD000001	TRANSISTOR	6
Q 98		B1CFGD000003	TRANSISTOR	1
Q 108, 152, 153, 735		B1CFRD000046	FET	4
Q 608		B1CFRD000045	FET	1
Q 737, 738		B1GKCFJN0004	TRANSISTOR	2
R 3, 4, 9, 52, 84, 92, 127, 166, 211, 262, 263, 345, 391, 417, 511, 646, 647, 648, 651, 656, 657, 659, 670, 675, 780, 787, 793, 862		ERJ2GEJ102X	RESISTOR, 1/16W, 1KΩ	28

R 5, 7, 10, 11, 14, 16, 17, 22, 23, 24, 25, 26, 30, 31, 32, 33, 34, 35, 36, 38, 39, 40, 45, 51, 58, 59, 60, 61, 62, 63, 64, 65, 73, 85, 86, 90, 98, 129, 132, 135, 138, 139, 140, 147, 153, 157, 160, 164, 174, 182, 203, 204, 233, 235, 241, 251, 256, 304, 312, 334, 335, 338, 340, 352, 381, 393, 394, 395, 418, 433, 440, 441, 442, 443, 444, 445, 455, 460, 461, 466, 472, 473, 480, 481, 482, 483, 489, 498, 512, 525, 538, 539, 565, 584, 585, 587, 590, 607, 611, 645, 708, 714, 738, 756, 757, 758, 773, 774, 785, 788, 849, 863, 865, 928, 957, 958, 960, 961, 962, 963, 964, 965, 966, 967, 968, 969, 976, 977, 978, 979, 980, 981, 982, 983, 984, 986, 987, 988, 989, 1052, 1055, 1096, 1099, 1100, 1101, 1102, 1103, 1110, 1111, 1137, 1138, 1149, 1226,		ERJ2GE0R00X	RESISTOR, 1/16W, 0Ω	157
R 6, 302		ERJ2GEJ510X	RESISTOR, 1/16W, 51Ω	2
R 12, 13, 67, 640, 674,		ERJ2RKF1000X	RESISTOR, 1/16W, 100Ω	6
R 18, 53, 91, 146, 192, 194, 242, 269, 272, 291, 309, 310, 315, 320, 321, 342, 357, 359, 360, 366, 383, 404, 405, 408, 429, 434, 456, 457, 458, 459, 595, 598, 600, 603, 617, 618, 685, 686, 699, 717, 770, 778, 782, 786, 795, 839, 842, 858, 859, 882, 935, 938, 949, 1136, 1173, 1175, 1187, 1192		ERJ2GEJ104X	RESISTOR, 1/16W, 100KΩ	58
R 19, 167, 524, 1139		ERJ2RKF4990X	RESISTOR, 1/16W, 499Ω	4
R 29, 54		ERJ2RKF20R0X	RESISTOR, 1/16W, 20Ω	2
R 37, 254		ERJ2GEJ680X	RESISTOR, 1/16W, 68Ω	2
R 41		ERJ2RKF1501X	RESISTOR, 1/16W, 1.5KΩ	1
R 42, 118		ERJ2RKF7500X	RESISTOR, 1/16W, 750Ω	2
R 47, 48, 49, 50, 66, 70, 87, 88, 101, 151, 172, 177, 213, 225, 234, 246, 258, 270, 271, 273, 274, 275, 278, 279, 281, 305, 318, 319, 350, 365, 373, 380, 389, 403, 411, 424, 428, 446, 448, 463, 486, 543, 559, 562, 586, 593, 596, 616, 660, 668, 679, 696, 703, 707, 720, 753, 755, 765, 767, 791, 813, 838, 843, 872, 880, 884, 887, 888, 909, 915, 916, 927, 937		ERJ2GEJ103X	RESISTOR, 1/16W, 10KΩ	73

R 55, 56, 57, 113, 985		ERJ2RKF49R9X	RESISTOR, 1/16W, 49.9Ω	5
R 68		ERJ2RKF24R9X	RESISTOR, 1/16W, 24.9Ω	1
R 69		ERJ2RKF1300X	RESISTOR, 1/16W, 130Ω	1
R 75, 119, 142, 143, 144, 154, 155, 156, 158, 159, 187, 219, 222, 223, 276, 314, 351, 353, 414, 516, 517, 519, 579, 940		ERJ2GEJ330X	RESISTOR, 1/16W, 33Ω	24
R 625, 626, 627, 628, 806		D1BDR1000002	RESISTOR, 1/8W, 0.1Ω	5
R 76, 77		D1BDR360A083	RESISTOR, 1/3W, 0.360Ω	2
R 93, 99, 100, 131, 415, 471, 522, 925, 926		ERJ2GEJ332X	RESISTOR, 1/16W, 3.3KΩ	9
R 141, 282, 284, 285, 292, 295, 296, 374, 375, 402, 501, 505, 506, 515, 530, 531, 601, 694, 709, 715, 724, 725, 726, 736, 737, 759, 760, 762, 763, 781, 929, 945		ERJ2GEJ101X	RESISTOR, 1/16W, 100Ω	32
R 145, 449, 846, 847, 850, 851, 852, 1109		ERJ2GEJ472X	RESISTOR, 1/16W, 4.7KΩ	8
R 161, 176, 259, 390, 392, 432, 474, 475, 914		D1H81034A024	RESISTOR ARRAY	9
R 165, 313, 547, 734		ERJ2RHD203X	RESISTOR, 1/16W, 20KΩ	4
R 169, 396, 399, 680		ERJ2GEJ221X	RESISTOR, 1/16W, 220Ω	4
R 171, 288, 289		ERJ2RKF3901X	RESISTOR, 1/16W, 3.9KΩ	3
R 178, 216, 218, 343, 388, 421, 453		D1H8R0040009	JUMPER	7
R 179, 518		ERJ2GEJ331X	RESISTOR, 1/16W, 330Ω	2
R 188, 243, 244, 245, 247, 264, 267, 268, 306, 307, 308, 437, 955		D1HY1038A007	RESISTOR, ARRAY	13
R 189		ERJ2RKF22R6X	RESISTOR, 1/16W, 22.6Ω	1
R 193, 361, 362, 363, 382, 410, 425, 599, 711, 924		ERJ2GEJ474X	RESISTOR, 1/16W, 470KΩ	10
R 215		ERJ2RKF54R9X	RESISTOR, 1/16W, 54.9Ω	1
R 220, 604		ERJ2GEJ220X	RESISTOR, 1/16W, 22Ω	2
R 226		ERJ2RKF56R0X	RESISTOR, 1/16W, 56Ω	1
R 236		D1H87504A024	RESISTOR ARRAY	1
R 260, 544, 718		ERJ3GEYJ100V	RESISTOR, 1/10W, 10Ω	3
R 265, 266, 290, 294		ERJ2RKD5103X	RESISTOR, 1/16W, 510KΩ	4
R 280		D1JB5M00A029	RESISTOR, 1W, 5mΩ	1
R 286, 467		ERJ2GEJ334X	RESISTOR, 1/16W, 330KΩ	2
R 287		ERJ2RKF5602X	RESISTOR, 1/16W, 56KΩ	1
R 293, 684, 722, 723, 739, 740, 741, 742, 743, 749		D1BDR018A099	RESISTOR, 1/3W, 0.018Ω	10
R 297, 298, 545, 560, 681, 727, 728, 745		ERJ2RHD104X	RESISTOR, 1/16W, 100KΩ	8
R 299, 729		ERJ3GEYJ102V	RESISTOR, 1/10W, 1KΩ	2
R 300, 470, 526, 527, 730, 732, 733		ERJ2RKF3302X	RESISTOR, 1/16W, 33KΩ	7
R 301, 683, 731		ERJ2RKF2202X	RESISTOR, 1/16W, 22KΩ	3
R 311		ERJ2RHD3922X	RESISTOR, 1/16W, 39.2KΩ	1
R 323, 324		D1H83304A024	RESISTOR ARRAY	2
R 330, 552, 633, 634, 761, 864		ERJ2RHD103X	RESISTOR, 1/16W, 10KΩ	6
R 336, 337, 548		ERJ2GEJ333X	RESISTOR, 1/16W, 33KΩ	3
R 341		ERJ2RHD153X	RESISTOR, 1/16W, 15KΩ	1
R 344, 454, 465, 488, 490, 581, 594, 701, 705, 706, 710, 712, 713, 807, 808, 811, 939		ERJ2GEJ105X	RESISTOR, 1/16W, 1MΩ	17

R 358		ERJ6GEY0R00V	RESISTOR, 1/10W, 0Ω	1
R 367, 371		D1BA1003A029	RESISTOR, 1/32W, 100KΩ	2
R 368, 370		ERA3YKB154V	RESISTOR, 1/16W, 150KΩ	2
R 372		D1JB4M00A016	RESISTOR, 1W, 4mΩ	1
R 376, 377, 452		ERJ2RHD1202X	RESISTOR, 1/16W, 12KΩ	3
R 379		D1H82224A024	RESISTOR ARRAY	1
R 385		D1H81024A024	RESISTOR ARRAY	1
R 386, 450, 592		ERJ2GEJ473X	RESISTOR, 1/16W, 47KΩ	3
R 387		D1H84734A024	RESISTOR ARRAY	1
R 397, 521, 873		ERJ2GEJ471X	RESISTOR, 1/16W, 470Ω	3
R 398, 438		ERJ2GEJ181X	RESISTOR, 1/16W, 180Ω	2
R 400, 401		D1H82214A024	RESISTOR, 1/16W, 220Ω	2
R 406, 407, 413, 570, 571, 572, 834		ERJ3GEYJ1R0V	RESISTOR, 1/10W, 1Ω	7
R 412, 573, 574, 575, 630, 644		ERJ3GEY0R00V	RESISTOR, 1/10W, 0Ω	6
R 416		D1H81004A024	RESISTOR ARRAY	1
R 419		ERJ2RKF37R4X	RESISTOR, 1/16W, 37.4Ω	1
R 420		ERJ2GEJ106X	RESISTOR, 1/16W, 10MΩ	1
R 426, 427, 479, 493, 582, 583, 912, 913, 931, 932, 1092, 1097, 1105, 1108, 1169, 1177, 1178, 1179		ERJ2GEJ222X	RESISTOR, 1/16W, 2.2KΩ	18
R 430, 469, 576, 606, 809, 810, 812, 814, 815, 816, 817, 832, 836, 837, 840, 867		ERJT06J152V	RESISTOR, 1/4W, 820KΩ	16
R 436, 464		ERJ2GEJ203X	RESISTOR, 1/16W, 20KΩ	2
R 491		ERJ2RKF90R9X	RESISTOR, 1/16W, 90.9Ω	1
R 492, 690, 691		ERJ2RHD302X	RESISTOR, 1/16W, 3KΩ	3
R 496		ERJ2RHD472X	RESISTOR, 1/16W, 4.7KΩ	1
R 528, 551, 735		ERJ2RHD303X	RESISTOR, 1/16W, 30KΩ	3
R 529, 776		ERJ2RKF2001X	RESISTOR, 1/16W, 2KΩ	2
R 532, 536, 537, 555, 556, 557, 558, 676, 687, 748, 750, 999		D1BDR022A099	RESISTOR, 1/3W, 0.022Ω	12
R 533, 534		ERJ2RKF5601X	RESISTOR, 1/16W, 5.6KΩ	2
R 535		ERJ2RKF1302X	RESISTOR, 1/16W, 13KΩ	1
R 540, 541, 553, 554, 602, 874, 875		ERJ2GEJ100X	RESISTOR, 1/16W, 10Ω	7
R 542		ERJ2GEJ153X	RESISTOR, 1/16W, 15KΩ	1
R 546		ERJ2RHD622X	RESISTOR, 1/16W, 6.2KΩ	1
R 549, 779		ERJ2GEJ223X	RESISTOR, 1/16W, 22KΩ	2
R 550		ERJ2RHD132X	RESISTOR, 1/16W, 1.3KΩ	1
R 561, 856, 869		ERJ2RKF8061X	RESISTOR, 1/16W, 8.06KΩ	3
R 563, 855		ERJ2RKF4702X	RESISTOR, 1/16W, 47KΩ	2
R 564, 871		ERJ2RKF3303X	RESISTOR, 1/16W, 330KΩ	2
R 566		ERJ2RKF2371X	RESISTOR, 1/16W, 2370Ω	1
R 567		ERJ2RHD1801X	RESISTOR, 1/16W, 2.2KΩ	1
R 568, 831		J0JHC0000078	DC POWER LINE BEADS	2
R 569, 835		ERJ3GEYJ101V	RESISTOR, 1/10W, 100Ω	2
R 580, 746		ERJ2RKF5101X	RESISTOR, 1/16W, 5.1KΩ	2
R 589		ERJ2GEJ3R3X	RESISTOR, 1/16W, 3.3Ω	1
R 609		ERJ3GEYJ562V	RESISTOR, 1/10W, 5.6KΩ	1
R 612		D1BDR4700001	RESISTOR, 1/8W, 0.47Ω	1
R 613, 614, 615		ERJ2GEJ562X	RESISTOR, 1/16W, 5.6KΩ	3
R 620		D1BA1802A029	RESISTOR, 1/32W, 18KΩ	1
R 622		ERJ2RKD1203X	RESISTOR, 1/16W, 120KΩ	1
R 623		ERJ2RHD3652X	RESISTOR, 1/16W, 36.5KΩ	1

R 624		ERJ2RKF6041X	RESISTOR、1/16W, 6.04KΩ	1
R 629		ERJ2RHD1432X	RESISTOR, 1/16W, 14.3KΩ	1
R 631, 632, 702, 777, 997		ERJ2RHD102X	RESISTOR, 1/16W, 1KΩ	5
R 635, 636		D1JB1M00A001	RESISTOR, 1W, 1mΩ	2
R 637, 638		ERJ2GEJ1R0X	RESISTOR, 1/16W, 1Ω	2
R 639		ERJ2RKF8201X	RESISTOR, 1/16W, 8.2KΩ	1
R 641		ERJ2RKF1371X	RESISTOR, 1/16W, 1.37KΩ	1
R 661, 662		ERJ2GEJ392X	RESISTOR, 1/16W, 3.9W	2
R 663, 664		ERJ2GEJ4R7X	RESISTOR, 1/16W, 4.7Ω	2
R 672		ERJ2GEJ202X	RESISTOR, 1/16W, 2Ω	1
R 673, 877		ERJ2RKF82R5X	RESISTOR, 1/16W, 82.5Ω	2
R 688		ERA3EKB1623V	RESISTOR, 1/16W, 162KΩ	1
R 689		ERJ2GEJ512X	RESISTOR, 1/16W, 5.1KΩ	1
R 704		ERJ2RHD4302X	RESISTOR, 1/16W, 43KΩ	1
R 744		D1H85604A024	RESISTOR ARRAY	1
R 751, 752, 799		D1BDR047A100	RESISTOR, 1/3W, 0.047Ω	3
R 754		ERJ2RHD6800X	RESISTOR, 1/16W, 680Ω	1
R 783, 784		D1H81044A024	RESISTOR, 1/16W, 100KΩ	2
R 789, 790		ERJ6GEYJ222V	RESISTOR, 1/10W, 2.2KΩ	2
R 796, 797		ERJ6GEYJ122V	RESISTOR, 1/10W, 1.2KΩ	2
R 829		D1JB1M00A016	RESISTOR, 1W, 1mΩ	1
R 830		ERJ2GEJ821X	RESISTOR, 1/16W, 820F	1
R 833		ERJ3GEYJ2R2V	RESISTOR, 1/10W, 2.2Ω	1
R 853		ERJ2RKF1802X	RESISTOR, 1/16W, 18KΩ	1
R 870		ERJ2RKF6801X	RESISTOR, 1/16W, 6.80KΩ	1
R 876, 994		ERJ2RKF2401X	RESISTOR, 1/16W, 2.4KΩ	2
R 905, 910		ERJ2GEJ822X	RESISTOR, 1/16W, 8.2KΩ	2
R 908		ERJ2GEJ273X	RESISTOR, 1/16W, 27KΩ	1
R 993, 995, 996		ERJ2RKF1500X	RESISTOR, 1/16W, 150Ω	3
T 2		G5BYC0000035	PULSE TRANSFORMER	1
X 1, 3, 701		H0J2505A0053	CRYSTAL OSCILLATOR	3
X 2		H0J327200085	CRYSTAL OSCILLATOR	1
X 5		H2D200500011	CERAMIC LOCK	1
X 6		H0J245500096	CRYSTAL OSCILLATOR	1
X 7		H0J240500051	CRYSTAL OSCILLATOR	1
ZA 1, 2		K1YGZZ000077	STAD NUT	2
ZA 3, 4		DRHM0160ZA	SCREW	2
ZA 704, 705		K1YGZZ000075	STUD	2
WWAN PCB				
C 304		F1J1A106A043	CAPACITOR	1
C 305, 306, 308		F1G1C104A048	CAPACITOR	3
C 307		F1G1H1010005	CAPACITOR, 50V, 100pF	1
CN 301		K1MN40BA0059	CONNECTOR	1
CN 302		K1MY52BA0291	MINI PCI EXPRESS	1
CN 303		K1NA08E00013	SIM CONNECTOR	1
CN 304		K1MN10BA0059	CONNECTOR	1
JK 300, 301, 305, 306, 307		K1QZA1AE0001	CONNECTOR	5
R 303, 304		ERJ2GE0R00X	RESISTOR, 1/16W, 0Ω	2
R 305, 308, 309		ERJ2GEJ103X	RESISTOR, 1/16W, 10KΩ	3
R 306, 307, 310		ERJ2GEJ101X	RESISTOR, 1/16W, 100Ω	3
ZA 300, 301		K1YGZZ000075	STUD	2
USB PCB				
C 100, 101, 102, 109		EEFCX0J121R	CAPACITOR, 6.3V, 120µF	4
CN 100		K1MN20BA0059	CONNECTOR	1
CN 101, 102, 103, 104		K1FY104BA024	CONNECTOR, USB	4
D 100, 101, 102, 103		B0KB00000044	DIODE	4

L 100, 101, 102, 109		J0MAB0000236	CHIP COMMON MODE CHALK COIL	4
L 103, 104, 105, 106, 107, 108, 110, 111		J0JHC0000022	INDUCTOR	8
KBD PCB				
CN 200		K1MN40BA0059	CONNECTOR	1
CN 201		K1MY13BA0102	CONNECTOR	1
CN 202		K1MY16BA0097	CONNECTOR	1
CN 203		K1MY07BA0096	CONNECTOR	1
BT PCB				
C 1		F1J1A106A043	CAPACITOR, 10V, 10uF	1
C 2, 4, 7		F1G1C104A048	CAPACITOR, 16V, 0.1uF	3
C 3, 5		F1G1H102A496	CAPACITOR, 50V, 1000pF	2
C 6, 9		F1G1E103A062	CAPACITOR, 25V, 0.01µF	2
C 8		F1G1H270A542	CAPACITOR, 50V, 27pF	1
C 10		F1G1HR50A543	CAPACITOR, 50V, 0.5pF	1
CN 1		K1MN10BA0059	CONNECTOR	1
IC 1		C0JBAZ002422	IC, FET SWITCH	1
IC 2		N5HZZ0000081	BLUETOOTH MODULE	1
IC 3		C0EBE0000460	IC	1
IC 5		C0JBAC000363	GATE LOGIC	1
JK 1		K1QZA1AE0001	CONNECTOR	1
L 1, 2		J0JJC0000015	INDUCTOR	2
L 4		G1C2N7ZA0029	INDUCTOR	1
Q 1		B1GBCFNN0042	TRANSISTOR	1
Q 2		B1DHDC000028	TRANSISTOR	1
R 1, 2, 3		ERJ2GEJ103X	RESISTOR, 1/16W, 10KΩ	3
EXT ANT PCB				
CN 3		K1QZB1AA0023	COAXIAL CONNECTOR	1
JK 3, 4		K1QZA1AE0001	CONNECTOR	2
IO PCB TW				
C 700, 702, 718, 719, 739, 760, 770		F1G1C104A048	CAPACITOR, 16V, 0.1µF	7
C 701		F1H1H104A748	CAPACITOR, 50V, 0.1µF	1
C 703, 704, 705, 706, 707, 708, 709, 710		F1G1H1010005	CAPACITOR, 50V, 100pF	8
C 712, 715		F1G1H330A542	CAPACITOR, 50V, 33pF	2
F 701	⚠	K5H123Y00001	FUSE, 12A, 65V	1
FL 703, 704, 705		J0HAAC000059	FILTER	3
IC 701		C0JBAR000565	VIDEO SWITCH	1
IC 703		C0JBAA000362	IC, LOGIC	1
L 700, 701, 702, 703, 704, 705, 706, 707		J0JBC0000033	INDUCTOR	8
L 708, 709, 710, 724		J0MAB0000236	CHIP COMMON MODE CHALK COIL	4
L 711, 712		J0JCC0000186	INDUCTOR	2
L 713, 714, 721, 722, 723		J0JCC0000078	INDUCTOR	5
L 717		J0JCC0000077	INDUCTOR	1
PA 700	⚠	D4FB1R10A023	POLY SWITCH	1
R 700, 701, 702		D1BA1500A023	RESISTOR, 1/16W, 150Ω	3
R 704		EZJP0V080KA	VARISTOR	1
R 716		D0GA101JA023	RESISTOR, 1/16W, 100Ω	1
R 717, 718		D0GA221JA023	RESISTOR, 1/16W, 220Ω	2
R 720, 721		D0GBR00J0004	RESISTOR, 1/10W, 0Ω	2
R 730, 731		D0GAR00J0005	RESISTOR, 1/16W, 0Ω	2
C 721, 722, 723, 738, 747, 754		F1G1C104A048	CAPACITOR, 16V, 0.1uF	6
C 736, 737		F1G1H102A496	CAPACITOR, 50V, 1000pF	2
C 740		F1H1A1050015	CAPACITOR, 10V, 1µF	1
C 741, 742		F1G1H1010005	CAPACITOR, 50V, 100pF	2

CN 700		K1MY60BA0371	CONNECTOR	1
CN 701		K1MY40BA0371	CONNECTOR	1
IC 702		C0JBAU000031	LOGIC IC	1
L 715, 716, 718, 719		J0JCC0000077	INDUCTOR	4
L 720		J0JHC0000032	INDUCTOR	1
L 725, 726, 727, 728, 729		J0ZZB0000130	FILTER	5
R 706, 719		D0GA472JA023	RESISTOR, 1/16W, 4.7KΩ	2
R 710, 711		D0GA103JA023	RESISTOR, 1/16W, 10KΩ	2
R 723, 724, 725		D1BA1500A023	RESISTOR, 1/16W, 150Ω	3
C 600		F1G0J105A001	CAPACITOR, 6.3V, 1µF	1
CN 601		K1NA09E00076	CONNECTOR	1
CN 602		K1MN12BA0059	CONNECTOR	1
R 601		D0GA471JA023	RESISTOR, 1/16W, 470Ω	1
SW 600		K0D112B00071	SW	1
CN 702		K1FA209BA004	CONNECTOR	1
CN 703		K1FB115BA014	CONNECTOR	1
CN 705		K1FY180BA001	CONNECTOR	1
JK 700, 701		K2HC103B0197	JACK	2
PAD SW PCB TW				
CN 400		K1MN15BA0059	CONNECTOR	1
CN 401		K1MY04BA0334	CONNECTOR	1
CN 402		K1MN10BA0059	CONNECTOR	1
R 401		D0GA471JA023	RESISTOR, 1/16W, 470Ω	1
SW 400, 401		EVQPLDA15	SWITCH	2
PSW LED PCB TW				
CN 500		K1MN10BA0059	CONNECTOR	1
SW 500		EVQPLDA15	SWITCH	1
C 500		F1G0J105A001	CAPACITOR, 6.3V, 1µF	1
D 500		B3ADB0000133	DIODE	1
D 501		B3AGB0000040	DIODE	1
D 502		B3ABB0000356	LED	1
IC 500		B4ZZ00000015	SENSOR	1
R 501		D0GA471JA023	RESISTOR, 1/16W, 470Ω	1
TOUCH SCREEN CONTROLLER PCB				
C 200, 201, 202, 203		F1G1E472A062	CAPACITOR, 25V, 4700pF	4
C 204, 205, 206, 207		F1G1H681A496	CAPACITOR, 50V, 680pF	4
C 208, 211, 212		F1G1A104A014	CAPACITOR, 10V, 0.1µF	3
C 209, 210		F1G1H102A496	CAPACITOR, 50V, 1000pF	2
C 213, 216, 217		F1J1A106A043	CAPACITOR, 10V, 10uF	3
C 214		F1G0J224A001	CAPACITOR, 6.3V, 0.22µF	1
CN 200		K1MN04BA0071	CONNECTER	1
CN 201		K1KA12BA0099	CONNECTOR	1
CN 202		K1KA07AA0266	CONNECTOR	1
D 200		B0KB00000044	DIODE	1
IC 200		C0EBE0000460	IC	1
IC 202		C1CB00002968	IC, TOUCH PANEL CONTROLLER	1
Q 202		B1GDCFNN0031	TRANSISTOR	1
Q 203		B1GBCFNN0042	TRANSISTOR	1
Q 204, 205		B1GBCFJN0037	TRANSISTOR	2
Q 206, 207		B1GDCFJN0023	TRANSISTOR	2
R 200, 206		ERJ2GEJ473X	RESISTOR, 1/16W, 47KΩ	2
R 203, 205, 207, 209, 210, 211, 212, 217, 222, 223		ERJ2GEJ102X	RESISTOR, 1/16W, 1KΩ	10
R 208, 231, 232		ERJ2GEJ273X	RESISTOR, 1/16W, 27KΩ	3
R 213, 214, 215, 216		ERJ2GEJ822X	RESISTOR, 1/16W, 8.2KΩ	4
R 218		ERJ2GEJ562X	RESISTOR, 1/16W, 5.6KΩ	1

R 227, 228		ERJ2GEJ270X	RESISTOR, 1/16W, 27Ω	2
R 229		ERJ2GEJ152X	RESISTOR, 1/16W, 1.5KΩ	1
R 233		ERJ2GE0R00X	RESISTOR, 1/16W, 0Ω	1
X 200		H2D600400005	OSCILLATOR, 6MHz	1